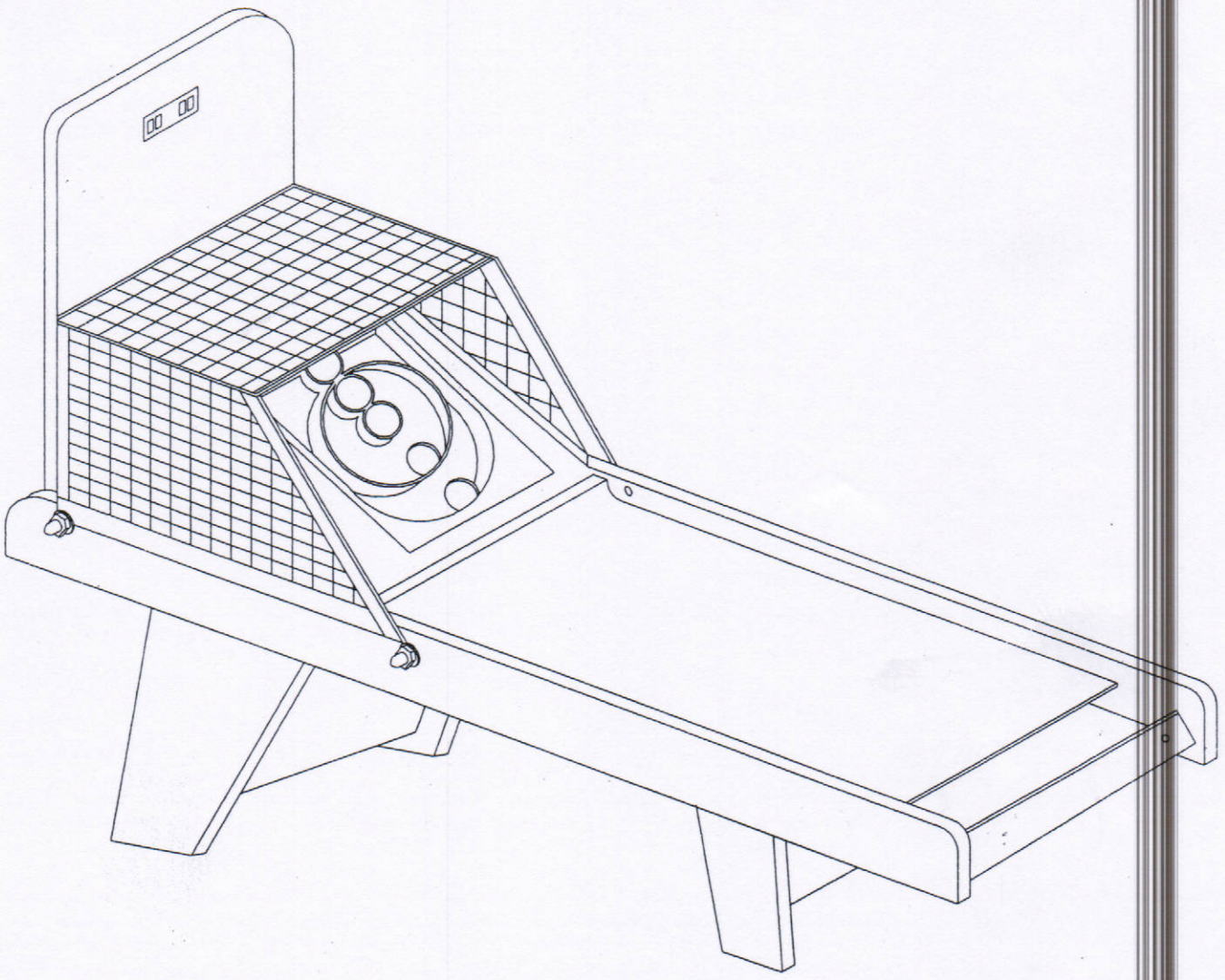

#1 Main frame 1 piece	#2 Right back leg 1 piece	#3 Left back leg 1 piece	#4 Right front leg 1 piece
#5 Left front leg 1 piece	#6 Leg connection board 2 piece	#7 Back board 1 piece	#8 Left target side panel 1 piece
#9 Right target side panel 1 piece	#10 Target board 1 piece	#11 Electronic Scorer 1 piece	#12 Ball 6 piece
#13 Round socket head screw 1/4"X3" 8 piece	#14 Steel washer 1/4" 18 piece	#15 Barrel nut 1/4" 8 piece	#16 Carriage bolt 5/16"X2-3/4" 8 piece
#17 Steel washer 5/16" 8 piece	#18 Hex nut 5/16" 8 piece	#19 Carriage bolt 1/4"X2-3/8" 2 piece	#20 Hex nut 1/4" 2 piece
#21 Phillip head screw 8mm	#22 Net	#23 Net frame back	#24 Net frame fr

#25 Steel bar 2 piece	#26 Carriage bolt 1/4"X1-3/4" 2 piece	#27 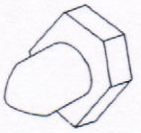 Acom nut 1/4" 4 piece	#28 Round socket head screw 1/4"X1-1/2" 4 piece
#29 Hex wrench 1 piece	#30 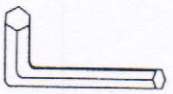 Wrench 1 piece	#31 Adapter 1 piece	

STEP 1:

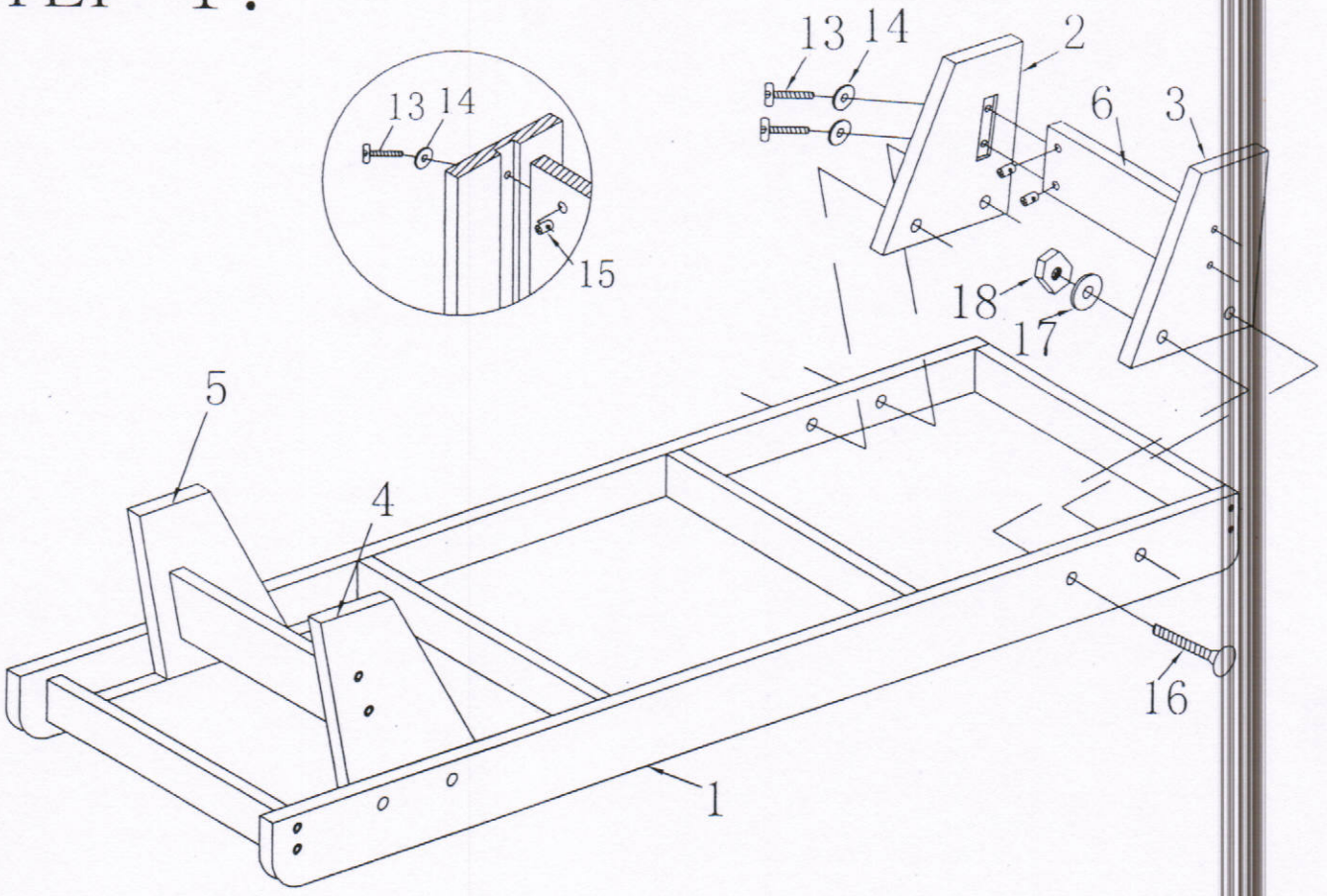

STEP 2:

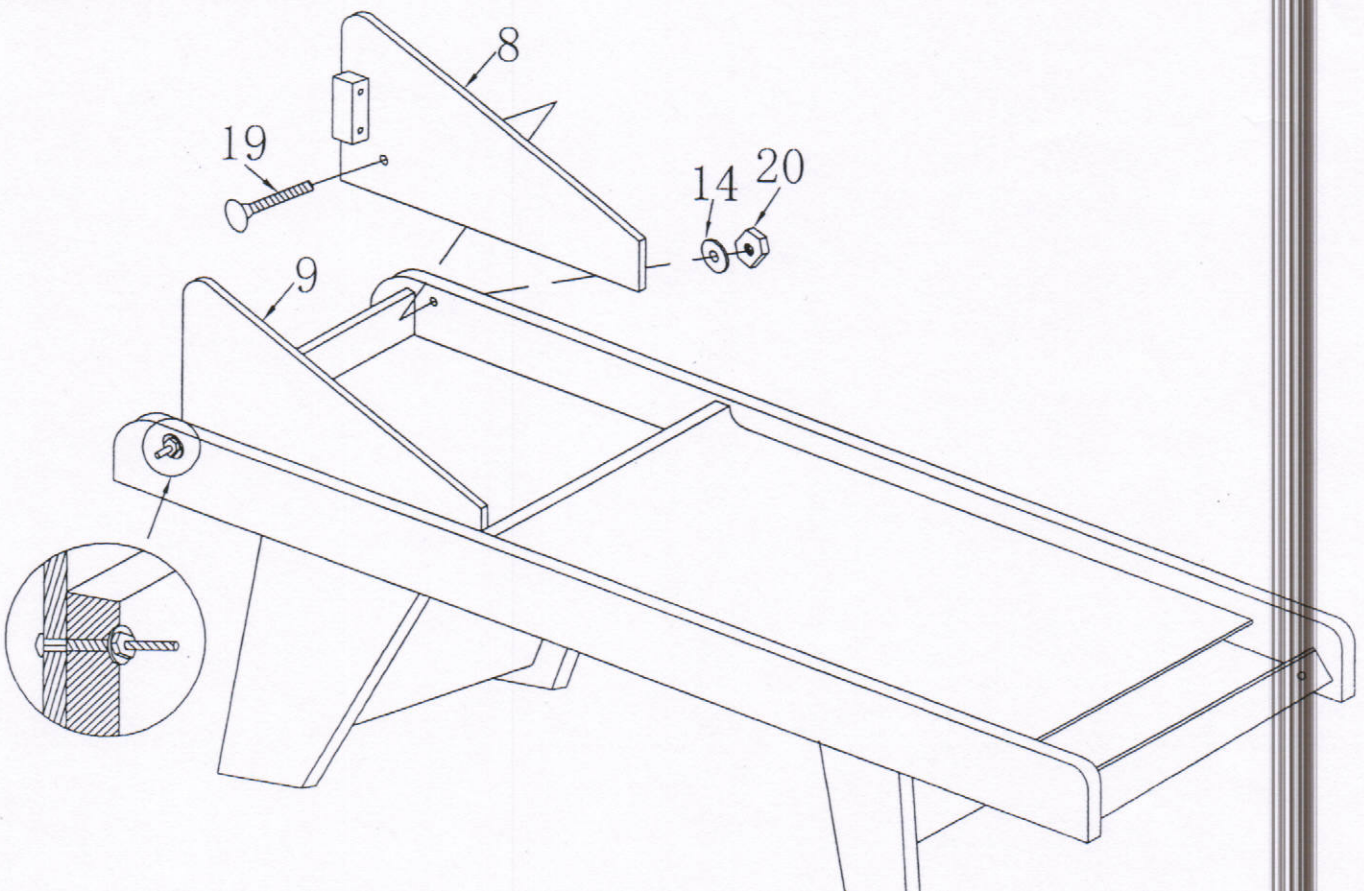

STEP 3:

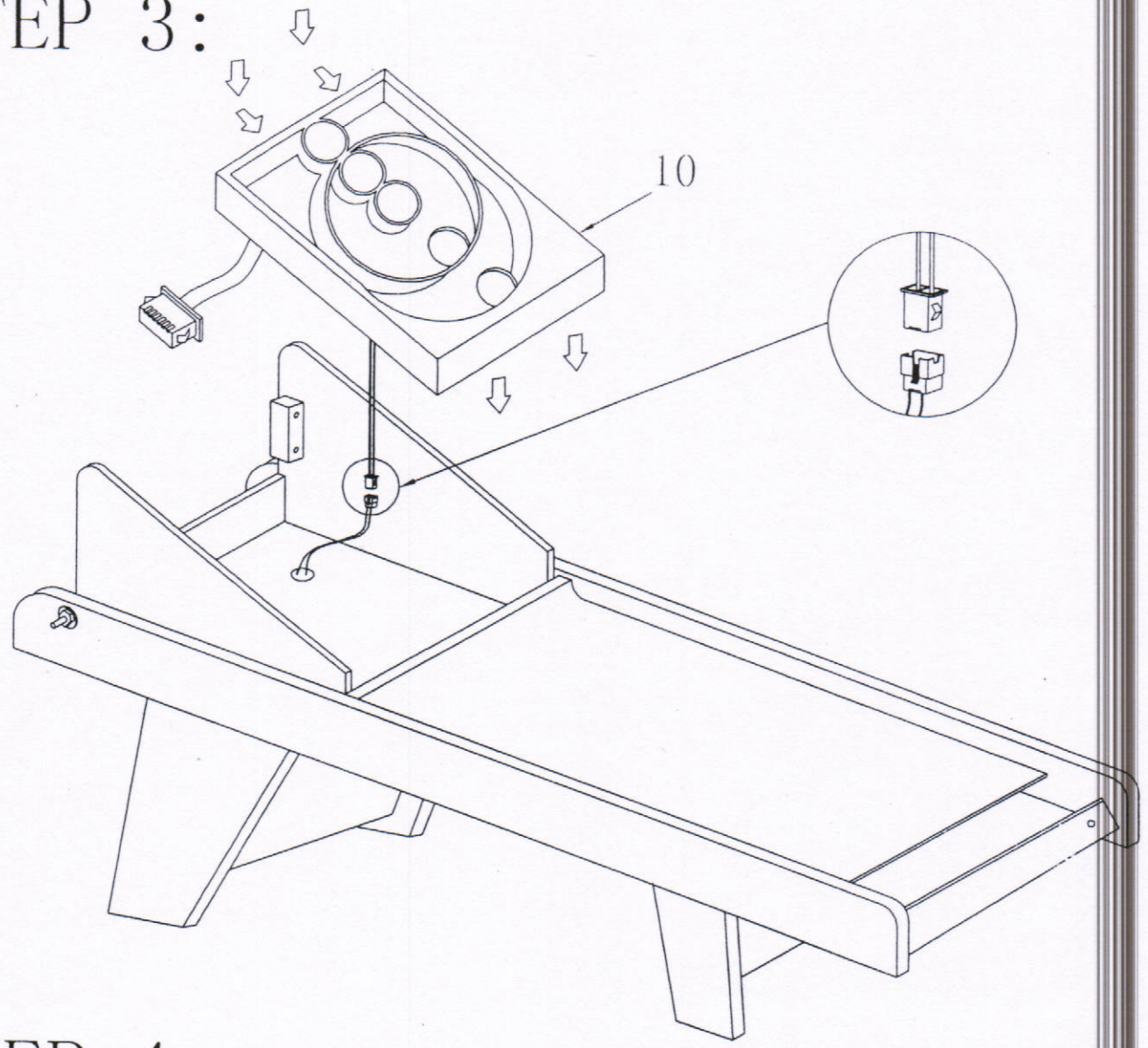

STEP 4:

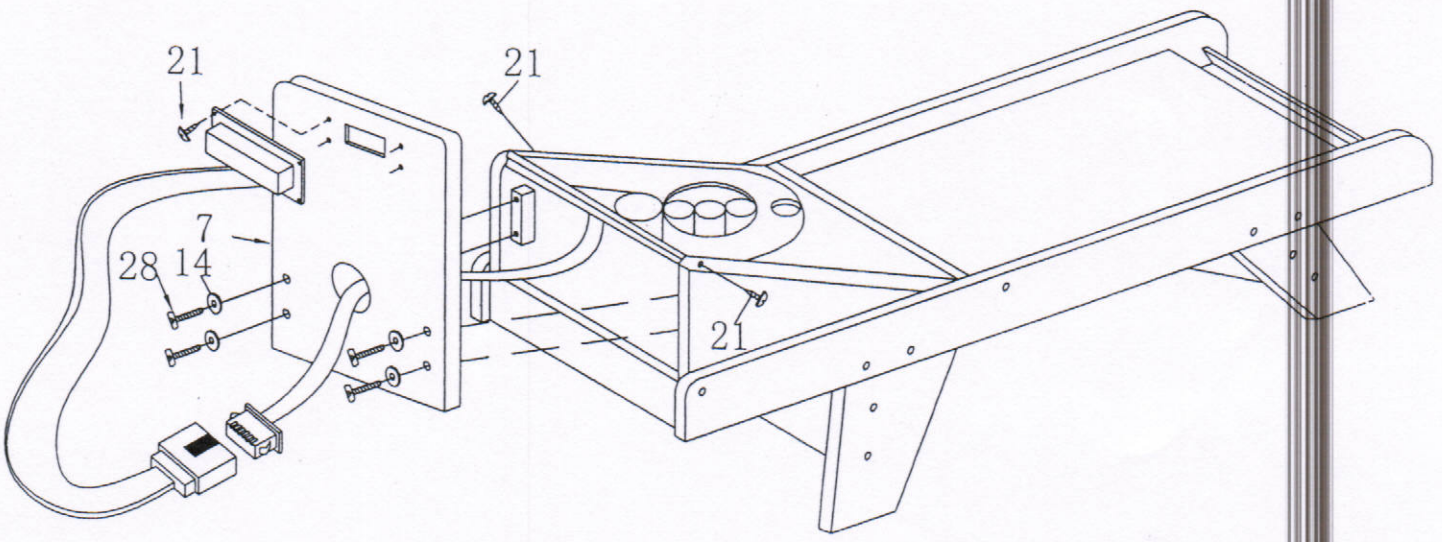
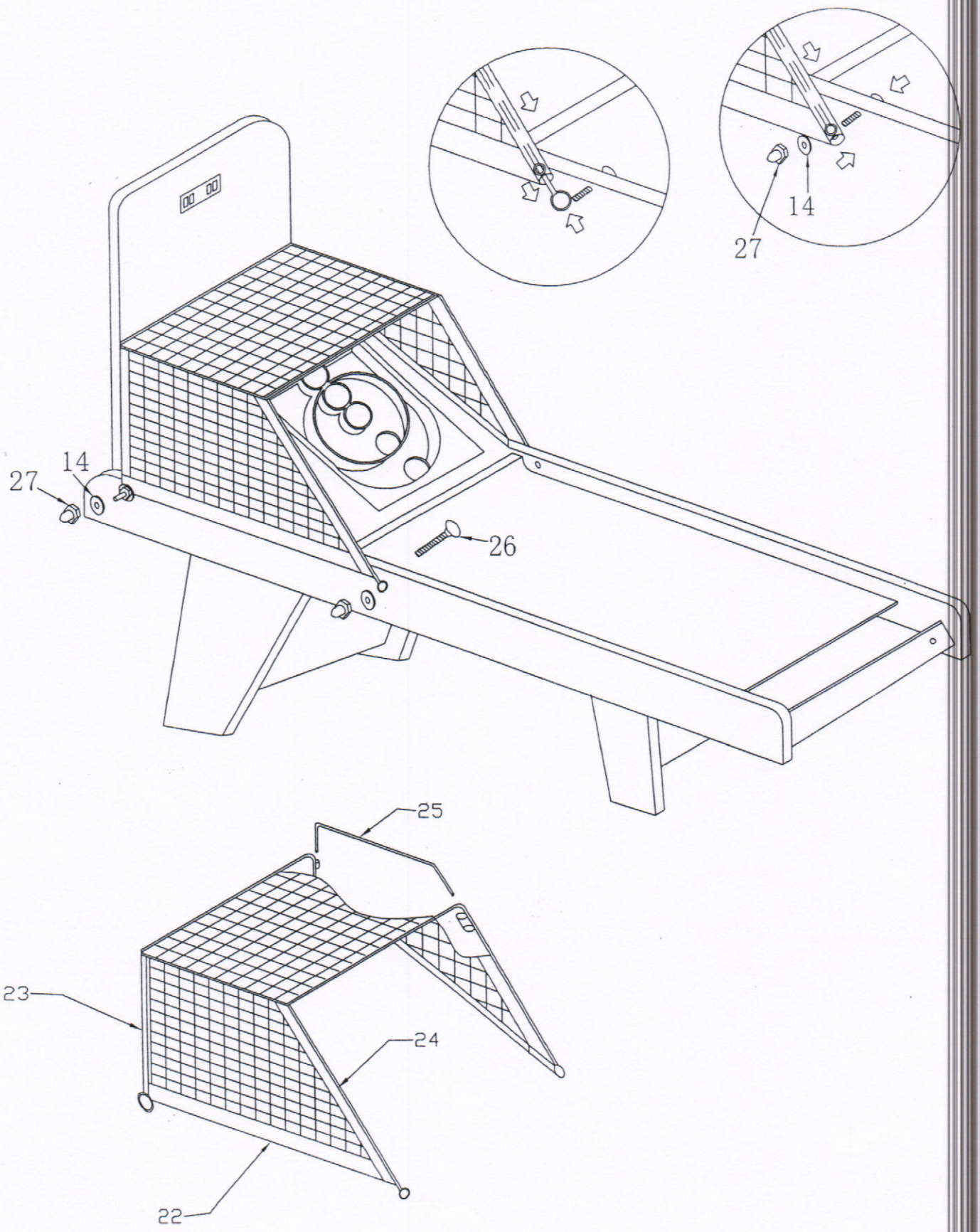
STEP 5: